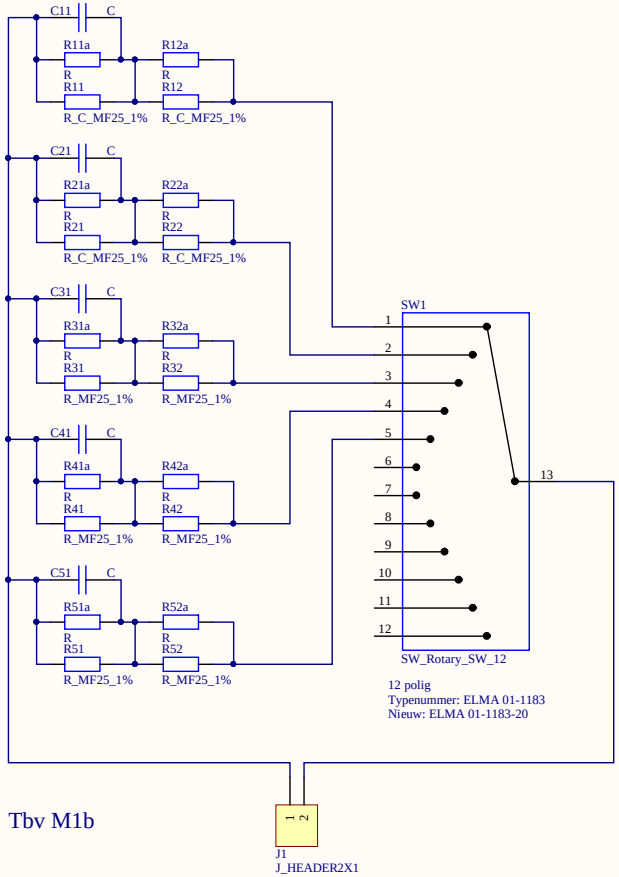

Tbv M1b

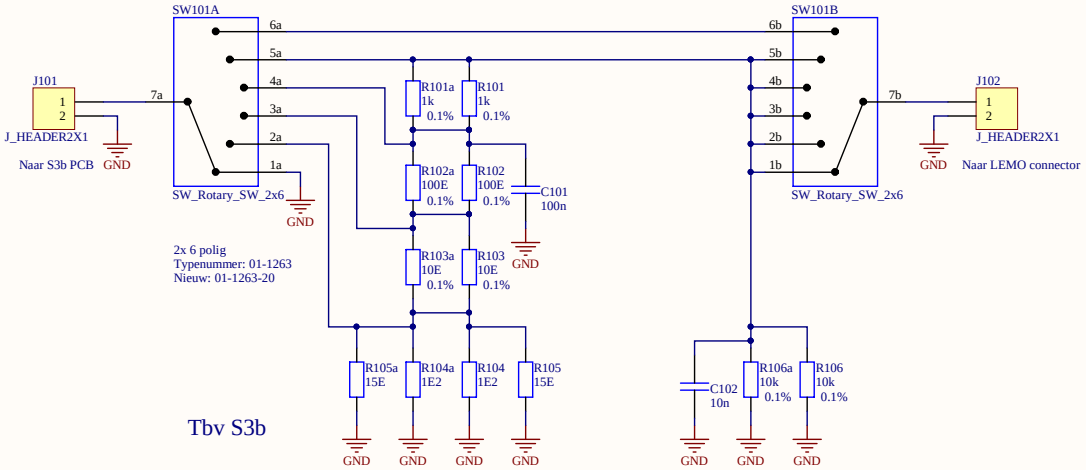

Tbv S3b

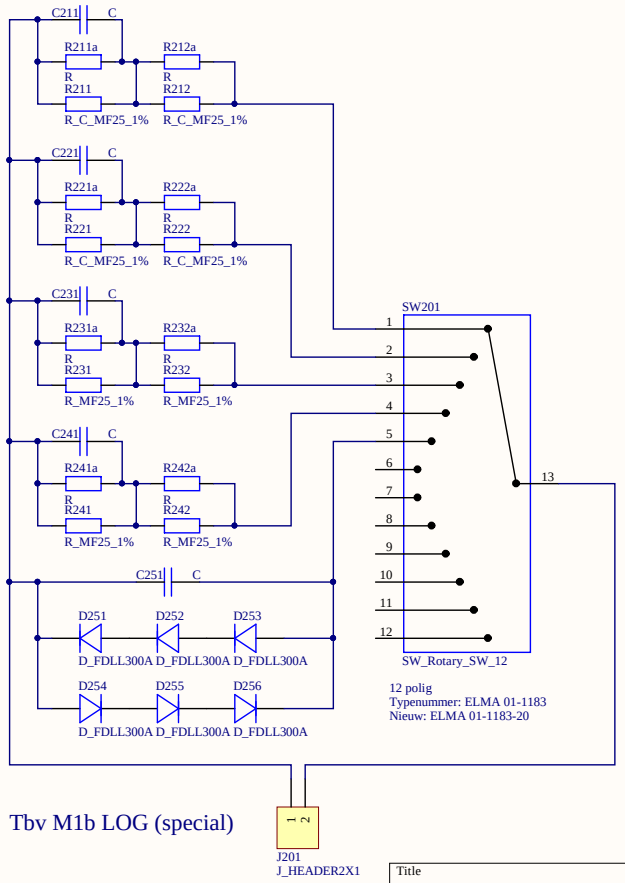

Tbv M1b LOG (special)

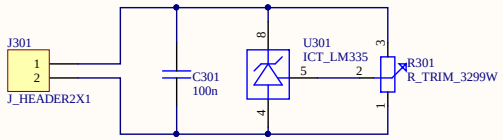

2 Pole female right angled receptacle
801-87-002-20-001101

Title		
Size A3	Number	Revision
Date: 18-2-2019	Sheet of	
File: M:\ud\..\Rotary_Switch.SchDoc	Drawn By:	

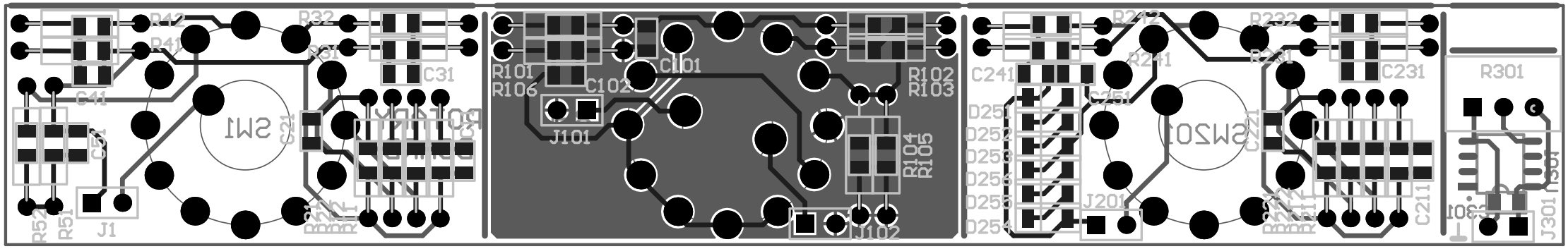
R42
R41
R32
R31
C31
C41
C21
SW1
R52
R51
J1
R101
R106
C102
C101
J101
R102
R103
R104
R105
J102
R242
R241
R232
R231
C241
C251
C231
D251
D252
D253
D254
D255
D256
D257
D258
SW201
J201
C211
R301
J301